57 AG3714PH
AG31014PH

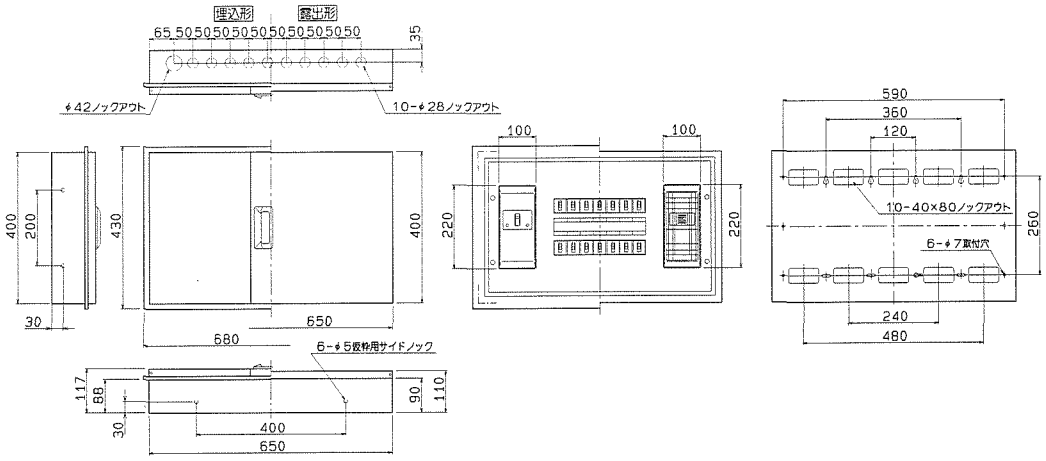

58 AG3718PH
AG31018PH

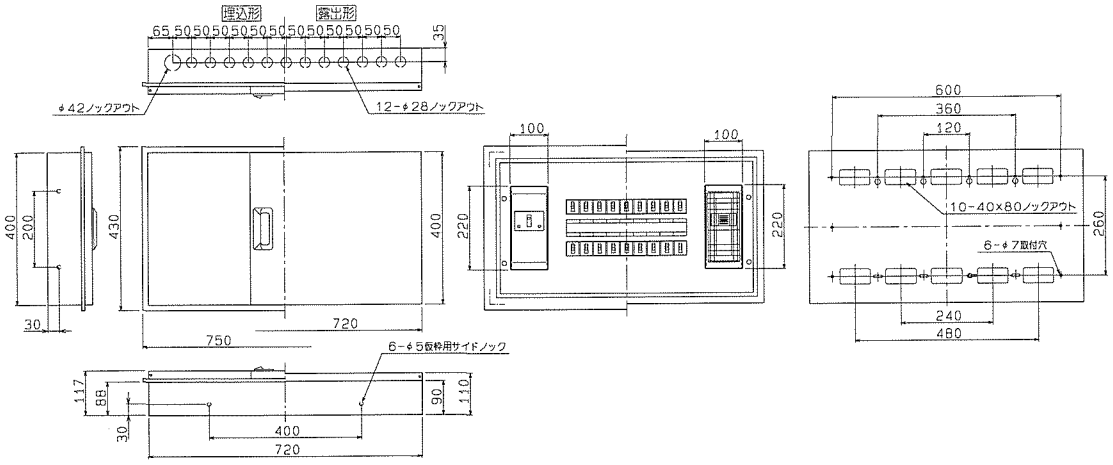

59 KG3304H
KG2304

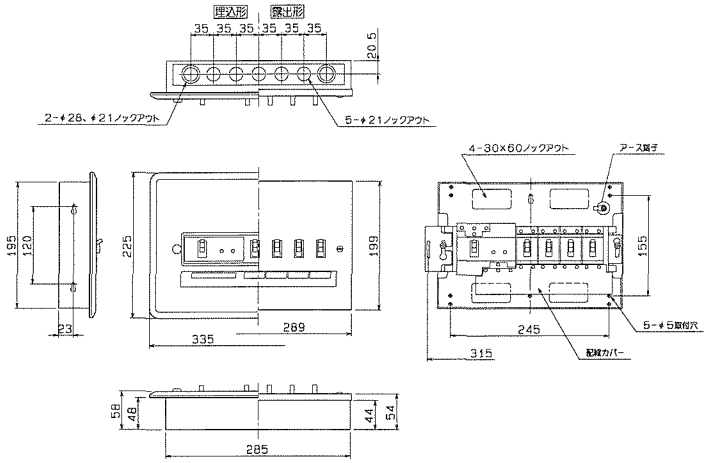
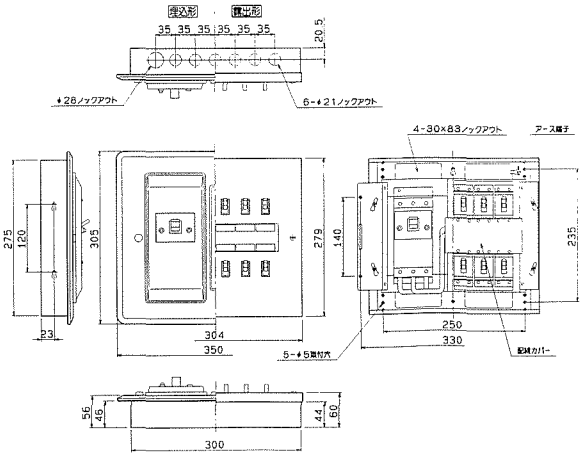
60 KG3306H
KG3406H
KG3506H