41 V304

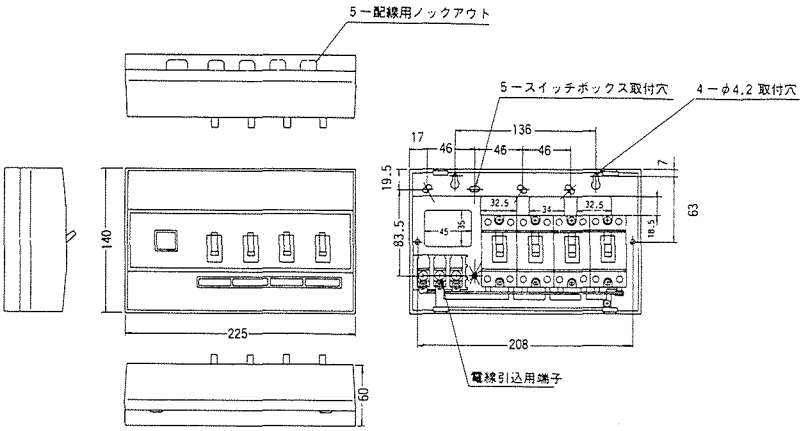

42 V306

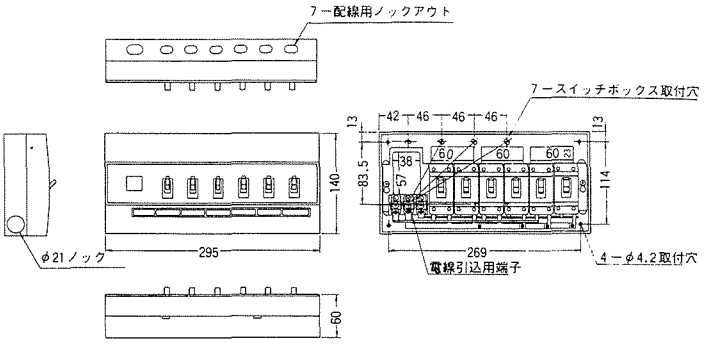

43 V203

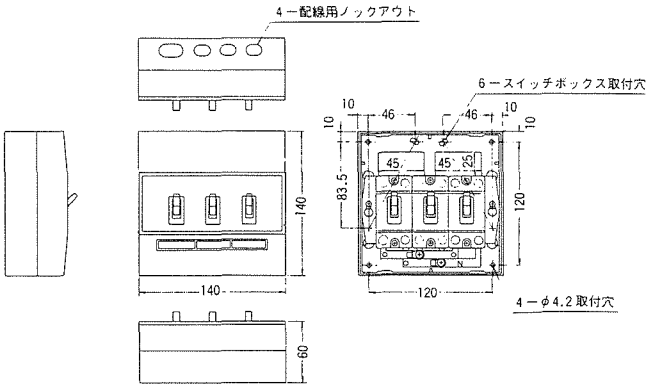
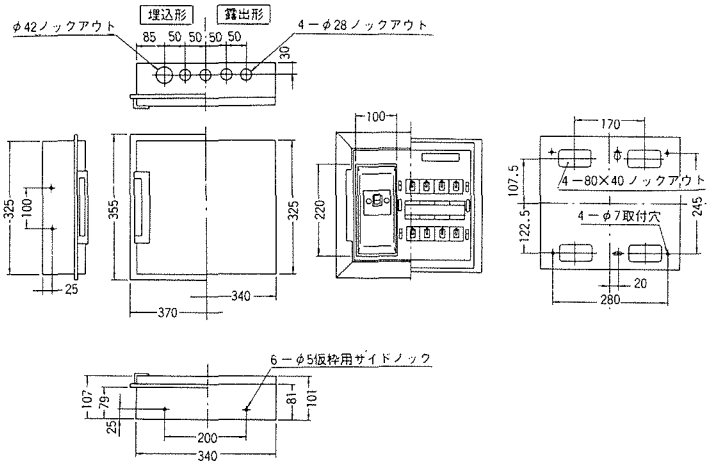
44 AG3304-4H
AG3408H
AG3508H
AB3304-4
AB3508
AB2304-4