外形寸法図(住宅用分電盤)

33 VG3506P VG3406P

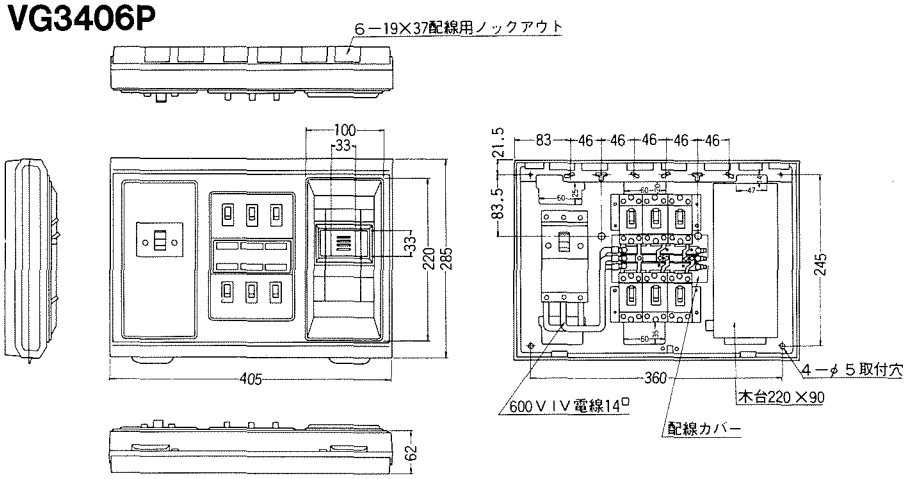

34 VG3306P VG3304-2P

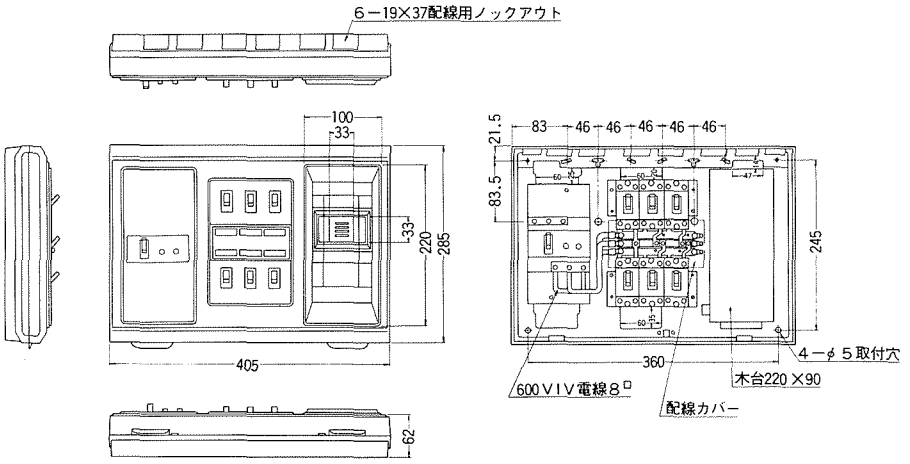

35 K306-2P

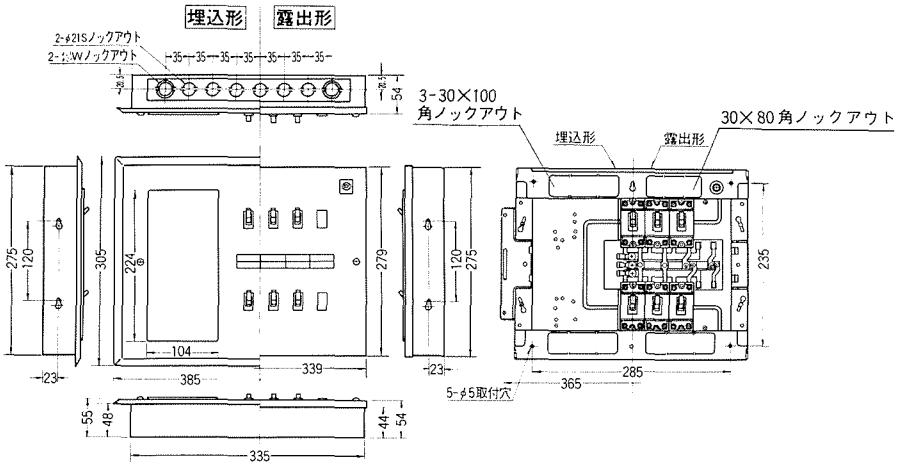
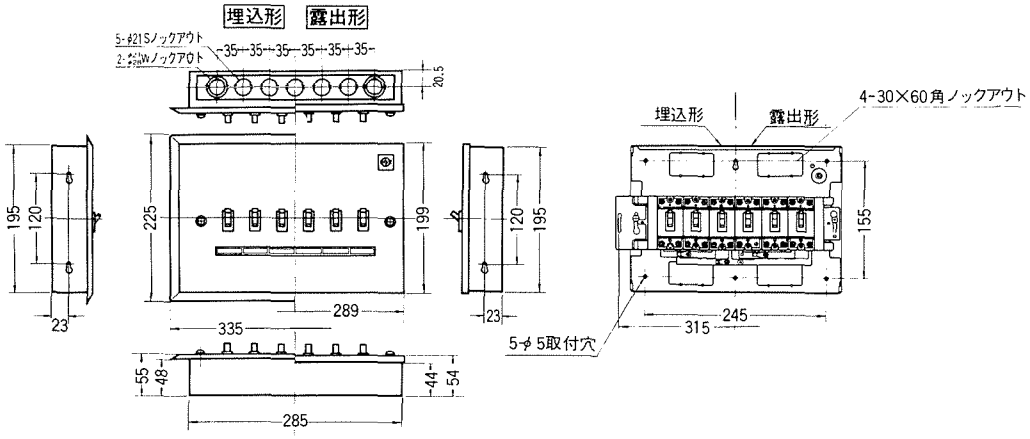
36 K306 K305-1 K304-2