## ⑬ V4Y-G3SPN

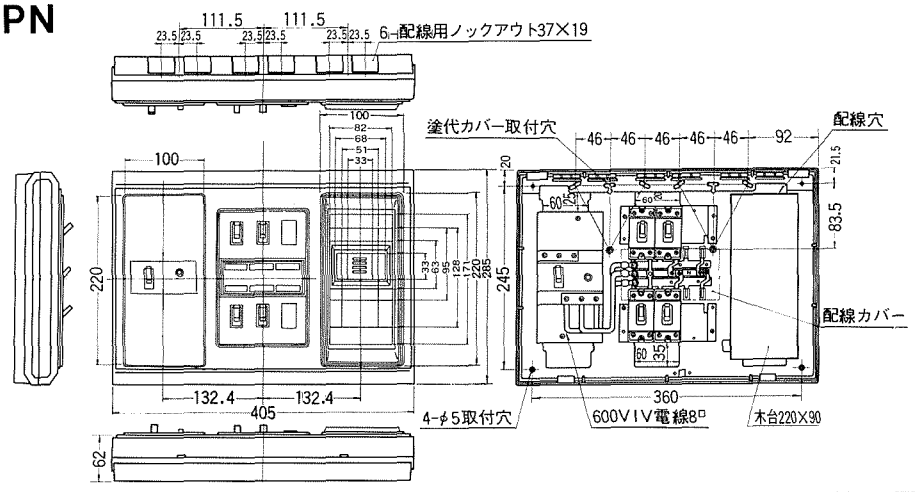


## ⑭ K3-1GZ

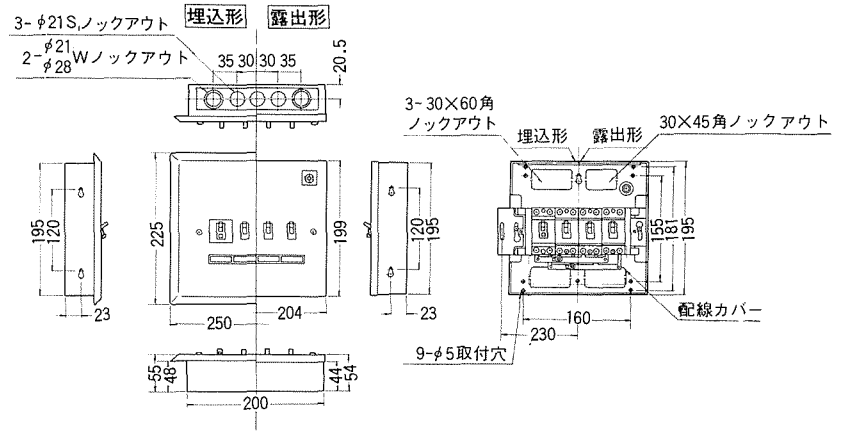


## ⑮ K3Y-1G

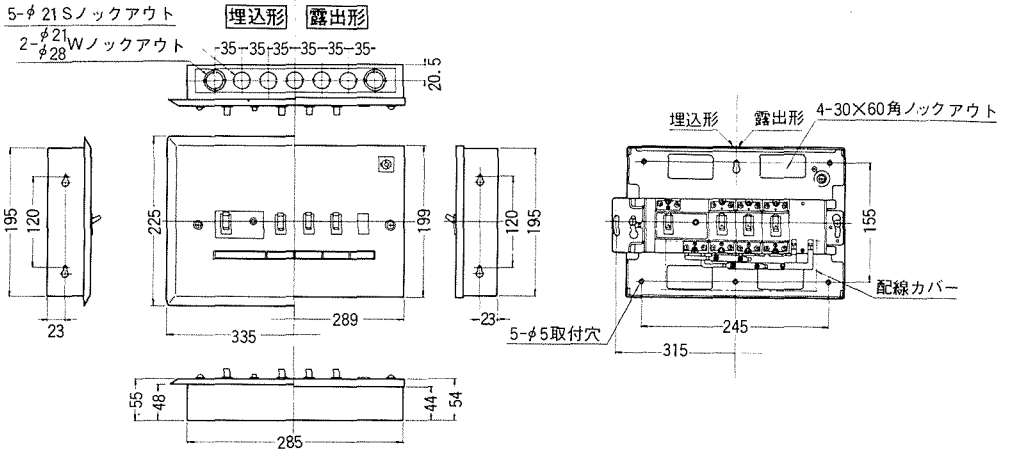

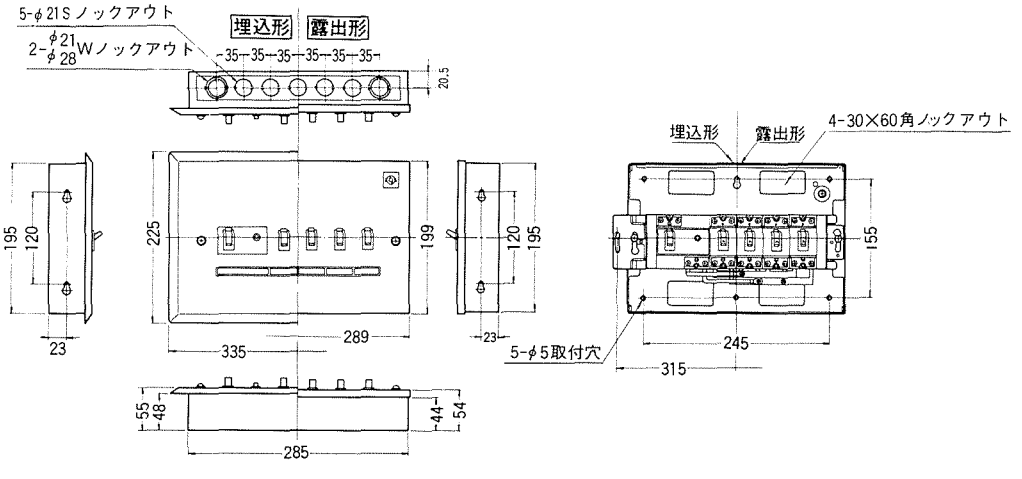
## ⑯ K4-G2